ML-P14M – Model # MF3720

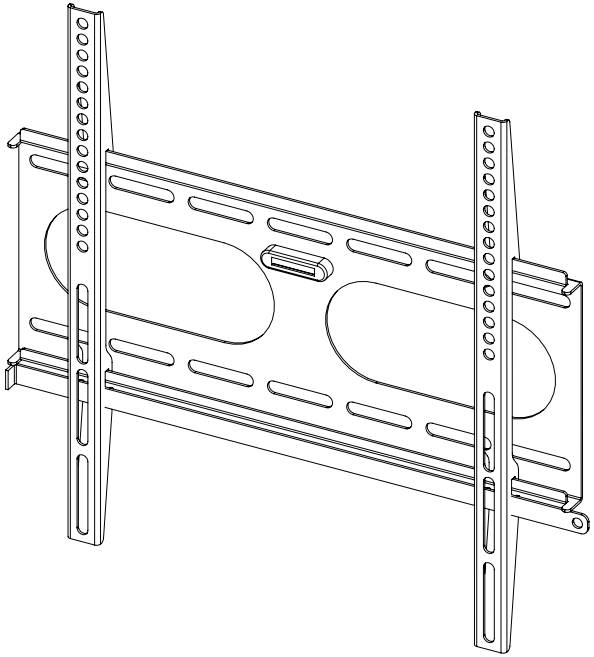

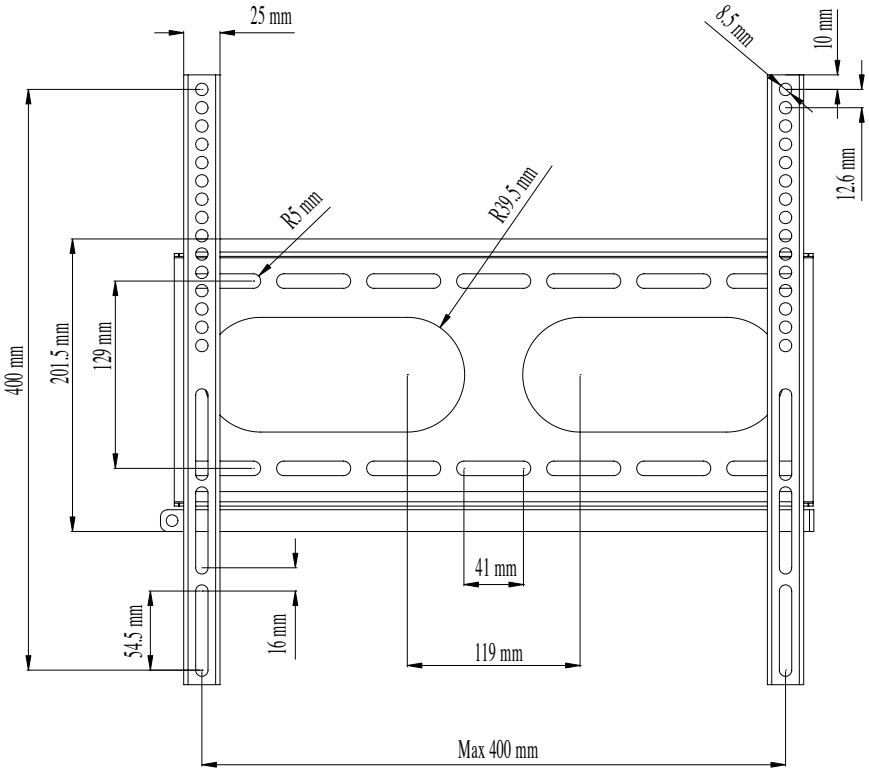

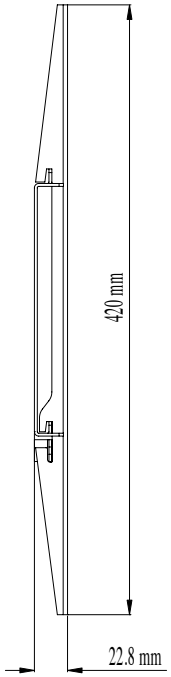

OCEANIA